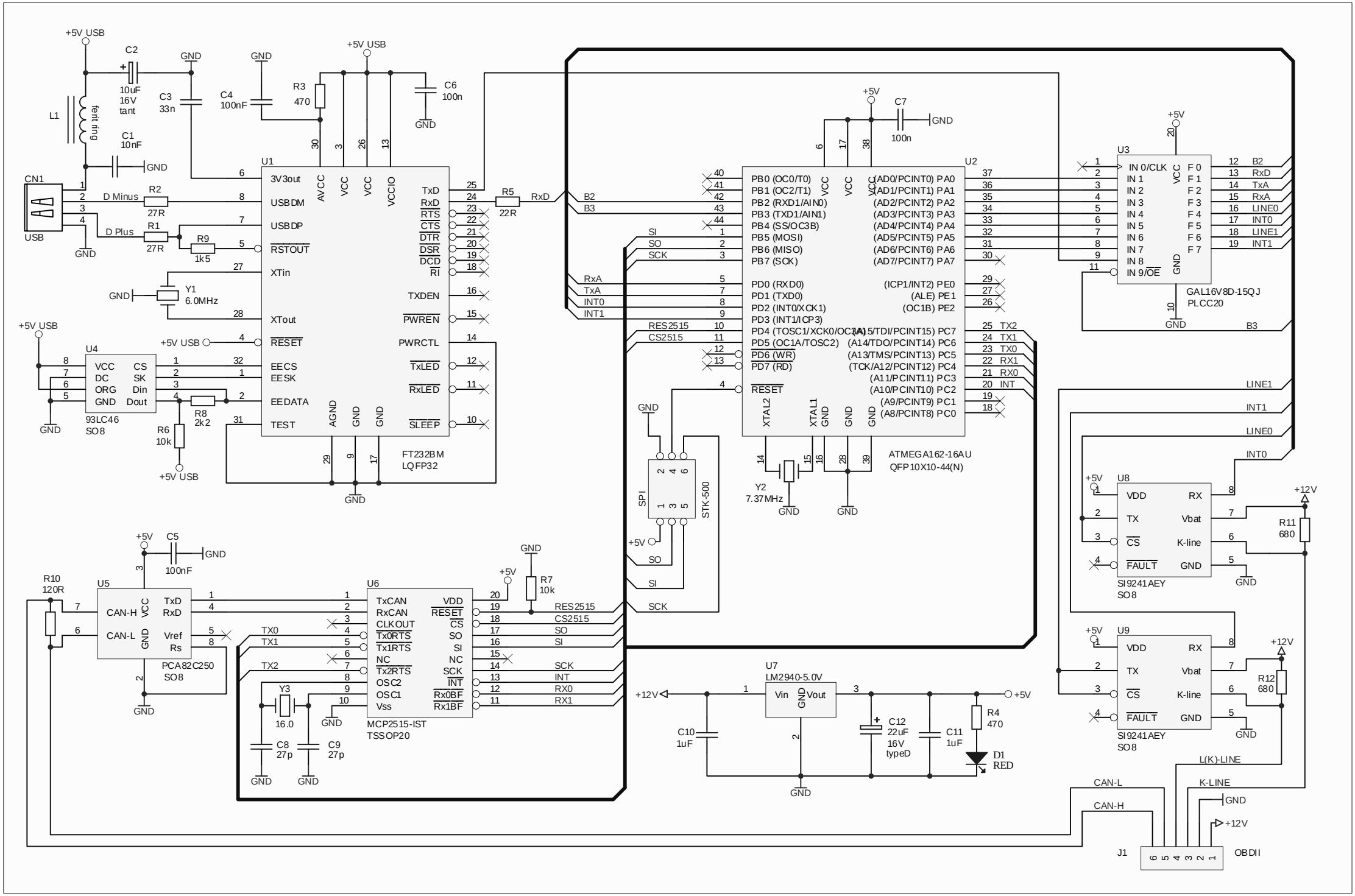
+5V USB
C2
10uF
16V
tant
GND
C3
33n
C4
100nF
R3
470
C6
100n
L1
fait ting
C1
10nF
CN1
USB
D Minus
D Plus
R2
27R
R1
27R
R9
1k5
U1
3V3out
USBDM
USBDP
RSTOUT
XTin
XTout
RESET
EECS
EESK
EEDATA
TEST
AVCC
VCC
VCCIO
AGND
TxD
RxD
RTS
CTS
DTR
DSR
DCD
RI
TXDEN
PWREN
PWRCTL
TxLED
RxLED
SLEEP
FT232BM
LQFP32
Y1
6.0MHz
U4
VCC
DC
ORG
GND
CS
SK
Din
Dout
93LC46
SO8
R8
2k2
R6
10k
R5
22R
RxD
B2
B3
SI
SO
SCK
RxA
TxA
INT0
INT1
RES2515
CS2515
U2
PB0 (OC0/T0)
PB1 (OC2/T1)
PB2 (RXD1/AIN0)
PB3 (TXD1/AIN1)
PB4 (SS/OC3B)
PB5 (MOSI)
PB6 (MISO)
PB7 (SCK)
PD0 (RXD0)
PD1 (TXD0)
PD2 (INT0/XCK1)
PD3 (INT1/ICP3)
PD4 (TOSC1/XCK0/OC3A)
PD5 (OC1A/TOSC2)
PD6 (WR)
PD7 (RD)
RESET
XTAL2
XTAL1
(AD0/PCINT0) PA0
(AD1/PCINT1) PA1
(AD2/PCINT2) PA2
(AD3/PCINT3) PA3
(AD4/PCINT4) PA4
(AD5/PCINT5) PA5
(AD6/PCINT6) PA6
(AD7/PCINT7) PA7
(ICP1/INT2) PE0
(ALE) PE1
(OC1B) PE2
(A15/TDI/PCINT15) PC7
(A14/TDO/PCINT14) PC6
(A13/TMS/PCINT13) PC5
(TCK/A12/PCINT12) PC4
(A11/PCINT11) PC3
(A10/PCINT10) PC2
(A9/PCINT9) PC1
(A8/PCINT8) PC0
TX2
TX1
TX0
RX1
RX0
INT
ATMEGA162-16AU
QFP10X10-44(N)
Y2
7.37MHz
C7
100n
+5V
U3
IN 0/CLK
IN 1
IN 2
IN 3
IN 4
IN 5
IN 6
IN 7
IN 8
IN 9/OE
F 0
F 1
F 2
F 3
F 4
F 5
F 6
F 7
GAL16V8D-15QJ
PLCC20
B2
RxD
TxA
RxA
LINE0
INT0
LINE1
INT1
B3
SPI
STK-500
U8
VDD
TX
CS
FAULT
RX
Vbat
K-line
SI9241AEY
SO8
+12V
R11
680
U9
R12
680
L(K)-LINE
K-LINE
CAN-L
CAN-H
J1
OBDII
C5
100nF
R10
120R
U5
CAN-H
CAN-L
TxD
RxD
Vref
Rs
PCA82C250
SO8
U6
TxCAN
RxCAN
CLKOUT
Tx0RTS
Tx1RTS
NC
Tx2RTS
OSC2
OSC1
Vss
VDD
RESET
CS
SO
SI
NC
SCK
INT
Rx0BF
Rx1BF
MCP2515-IST
TSSOP20
R7
10k
Y3
16.0
C8
27p
C9
27p
U7
LM2940-5.0V
Vin
Vout
C10
1uF
C12
22uF
16V
typeD
C11
1uF
R4
470
D1
RED